Installation Instructions

DEWERT

A Phoenix Mecano Company

Installation Instructions for the Manufacturer of the End Product

DUOMAT 5/6
Drive System

TÜV PRODUCT SERVICE
Produktion überwacht
Bauart geprüft

Issue
09/2005

DUOMAT 5/6

Contents

page

General Information..... 2

Designated use..... 3

Prerequisites..... 3

Getting to Know the System..... 5

Fitting..... 7

Operation..... 10

Maintenance and Repairs..... 12

Type Plate and Seal..... 13

Design of the DUOMAT 5/6 Drive System..... 14

Trouble-shooter's Guide..... 16

Cleaning and care..... 17

Manufacturer's Declaration, Declarations of Conformity..... 18

General Information

These instructions are intended for the manufacturer of the end product and are not designed for passing on to operator of the end product. With regard to the specialist information contained herein, these instructions can serve well as a basis for drawing up the instructions for the end products.

It is essential to note the information contained in these instructions! In doing so, you can prevent mistakes being made in installing or connecting the system which could result in …

- **injury and accidents as well as**
- **damage** to the drive system or the end product.

DEWERT **accepts no liability** for damage caused as a result of …

- non-observance of these instructions,
- alterations to the product not approved by DEWERT or
- the use of spare parts not manufactured or approved by DEWERT - these may not ensure adequate safety!

Due to the policy of ongoing product improvement, DEWERT reserves the right to carry out technical changes at any time without prior notification!

1. Designated Use

The **DUOMAT 5/6** drive system is **designed** for installation in beds …

- **for domestic use**,
- for the motorized adjustment of moveable bed parts using original DEWERT fittings and accessories.

The **DUOMAT 5/6** drive system is **not intended** for use ...

- in an environment where **inflammable** or **explosive** gases or vapours (e.g. anaesthetics) are likely to occur,
- in a damp environment or outdoors,
- with a medical product or for installing in a medical product.

The **DUOMAT 5/6** drive system for use in medical applications together with DEWERT accessories and DEWERT parts.
The **DUOMAT 5/6** drive system fulfills the general requirements for safety: IEC 60601-1.
The final medical product needs to be tested according to its intended use with the particular requirements as far as applicable.
Depending on the end use of the product failure detection or additional measures should be considered to avoid any risk when a mechanical movement of a motor occurs.

Attention!

- **The electric adjustment drive is not intended for use by small children or the unsupervised infirm.**
- **The electric adjustment drive is not a toy for children to play with.**

2. Prerequisites

The installation steps described in these instructions must be performed by a **fully trained electrical engineer**.

- This being the case, you should never carry out this work **yourself** unless you are a **qualified electrical engineer** or
- you should **entrust** this work to **suitably qualified persons** only.

Conformity according to EC Directives

The drive system is supplied ex factory as a machine **not ready for use** in accordance with the EC "Machines" Directive. In other words, you may not put the drive system into operation until you have met the **safety objectives** of the "Machines" Directive and issued a corresponding **Declaration of Conformity**!

The drive system meets the safety objectives of the EC Directives concerning **"Low voltage"** and **"Electromagnetic Compatibility (EMV)".**

Caution!

For your own safety!

Shutdown in an emergency is achieved by **pulling out the mains plug**! The mains plug must therefore be accessible at all times when the system is in operation to ensure it can be quickly pulled out of the wall socket in an emergency.

Avoid subjecting the mains connection lead to mechanical loads. Regular visual checks of the mains connection lead should be carried out at short-term intervals and in particular each time it has been subjected to a mechanical load.

If the mains connection lead of the **DUOMAT 5/6** drive system gets damaged, it must be replaced in order to prevent hazards. **Work to and replacement of the mains connection lead may only be carried out by specialist personnel holding the qualifications described on page 3 or by persons who have taken part and successfully completed the corresponding training programmes offered by DEWERT.**

In the Operating Instructions to be drawn up by yourselves, it is essential that you draw the operator's attention to the points mentioned here.

3. Getting to Know the System

The **DUOMAT 5/6** drive system is intended for the German market and complies with the Law applicable in Germany in implementation of relevant EC Directives.

a) Product versions

The drive system is supplied ex factory for the power-adjustment of the **head and foot ends** of a bearing surface (**DUOMAT 5/6**). This version is also available with just **one motor** (**MONOMAT 5/6**).

Slaves drives can be connected as optional extras, e.g. in order to allow power-adjustment of further bed elements.

A **DUOMAT 5/6** with connection facility for **one or two slave drives** is given the designation **TRIOMAT 5/6** or **QUADROMAT 5/6**. All the information contained in these Installation Instructions apply to this product accordingly.

Version	**DUOMAT 5 TRIO/ QUADRO 5**	**DUOMAT 6 TRIO/ QUADRO 6**
Slave drives	all DEWERT- slave drives[1)]	all DEWERT- slave drives[1)]
Handsets	CLASSIC STYLE BALANCE additional Handsets[1)]	CLASSIC STYLE BALANCE additional Handsets[1)]
optional Functions	NFS[2)] / NAS[3)] Massage IR-Transmitter IR-Receiver	NFS[2)] / NAS[3)] Massage IR-Transmitter IR-Receiver

1) Consult your DEWERT customer contact
2) Cut-off plug
3) Emergency lowering

DUOMAT 5/6

b) Technical data

Power supply..... :	24 / 100 / 110 / 115 / 230 / 240 VAC 50-60 Hz
Power consumption with rated load..... :	max. 9 / 2,2 / 2 / 1,9 / 1 / 0,9 A AC depending on the input voltage
Max. permissible compressive force..... :	3500 N per side (Optional 4500N)
Operating mode at max. rated load..... .....:	intermittent duty ID 2 min./18 min.
Protection classification.....:	II
Noise level.....:	≤ 65 dB(A)
Current input of all slave drives [2)]..... :	max. 8,5 ADC
Drive type..... :	dual drive
Drive options..... :	**MONOMAT/DUOMAT/TRIOMAT/ QUADROMAT**
Stroke [3)] (other strokes on request)..... :	87 – 69 (standard) / 74 / 64 / 48
Adjustment speed [4)].....:	up to 5,4 mm/s
Protection category.....:	IP20
Mains cut-off .....:	optional available
Colours.....:	see sales brochure

Dimensions and weights

Length x width of the drives.....:	**DUOMAT 5** 751 x 175 mm **DUOMAT 6** 751 x 180 mm
Axle base..... :	581 mm
Weight..... :	approx. 7,5 kg

Technical data of Emergency lowering

Voltage..... :	1 or 2 block batteries, 9 V each depending on the version

Ambient and storage conditions

Room temperature..... :	from +10° to +40° C
Rel. humidity.....:	from 30% to 75%
Barometric pressure.....:	from 700 hPa to 1060 hPa

1) Operating mode = **intermittent duty ID 2 min./18 min**., i e. run for 2 min. max. under rated load, then a **rest period** of 18 mi. must be observed, otherwise operational **failure could occur**!

2) According to regulations, no more than two drives may be run simultaneously at the rated load!

3) Stroke = maximum distance that the push block travels from the starting position in the retracted state to the end position in the extended state.

4) Adjustment speed = speed at which the push block travels without load (speed varies according to the load)

4. Fitting

Caution!

Only ever connect or disconnect electrical components when they are voltage-free.

Included in the supply package is the **DUOMAT 5/6,** if necessary an **auxiliary transformer** and **depending on the order a handset** and one or two **slave drives**. The components are prewired and receive plugs/ready to plug in.

With emergency lowering (NAS) one or two block batteries are attached externally to the drive.

When carrying out installation, make sure that the block batteries are not connected, as they could otherwise run down and as a result fail to supply the necessary power in an emergency situation.

a) Installation

Applying slight force, pull out engaged **closer (1)** until **receivers (2)** for the linkage levers are exposed.

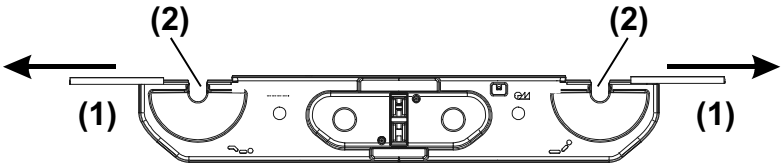

DUOMAT 5/6

Push the **DUOMAT 5/6** with the **receivers (2)** onto the **mounting (3)**. **Note:** this is only possible, however provided the **application** and the **drive** has travelled to the **starting (home) position** (see page 9).

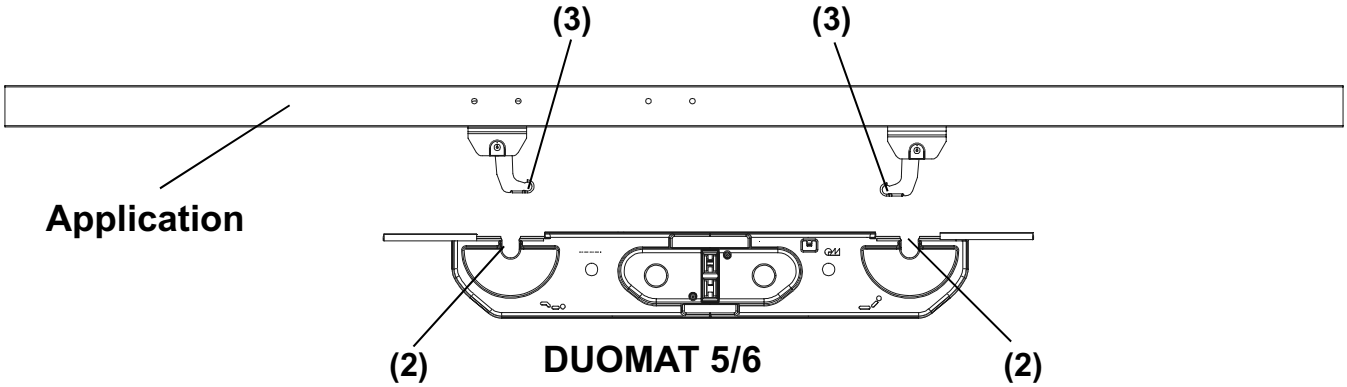

Slide the **closers (1)** back again until they engage.

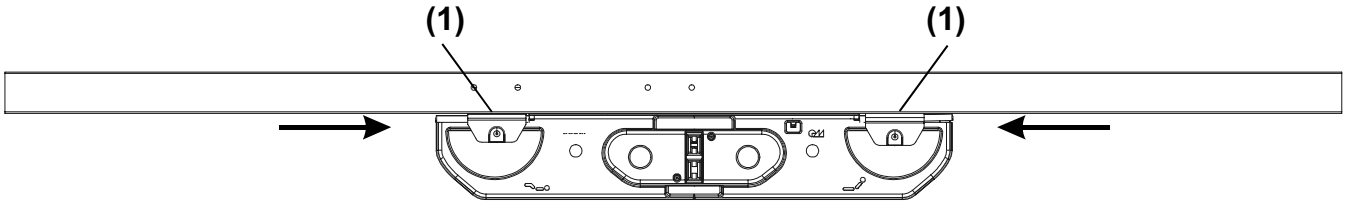

DUOMAT 5/6

b) Electrical connection

In the **Operating Instructions** to be issued by you, point out to the operator that if leads, in particular the **mains connection lead**, are **driven over** they could sustain damage. **Mechanical loads should also be avoided.**

When routing the cables make sure that they

- cannot get entangled or trapped,
- are not subjected to mechanical loads (i.e. do not pull, apply pressure or bend),
- cannot get damaged in any other way.

Make sure that the cables, in particular the **mains connection lead**, are fastened to the bed with adequate **strain relief** and **kink protection** and that suitable constructional measures prevent the **mains connection lead from trailing on the floor** when the bed is being **moved**.

First connect the **slave drives and controls**, as shown (see page 14 and 15).

Caution!

For your own safety!

Removing the mechanical connections between the mounting and drive system before the bed has been allowed to travel back to the horizontal starting position, presents a **trap risk** and hence a **potential injury hazard**.

Before opening the closer, it is therefore essential to allow the bed to first travel back to the **horizontal starting position!**

c) Dismantling

Operate the **application** to travel to the starting (home) position. **Remove** the **leads** from the respective plug sockets.

Support the drive (**DUOMAT 5/6**) before **opening the closer (1)** - once these are open, the drive is released immediately!

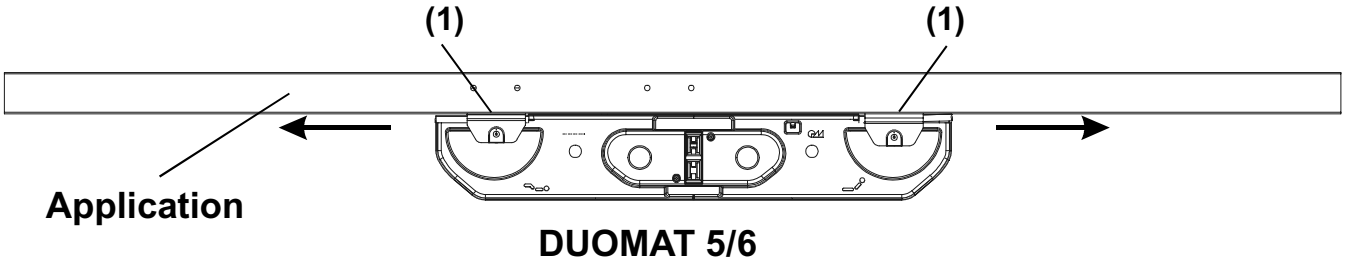

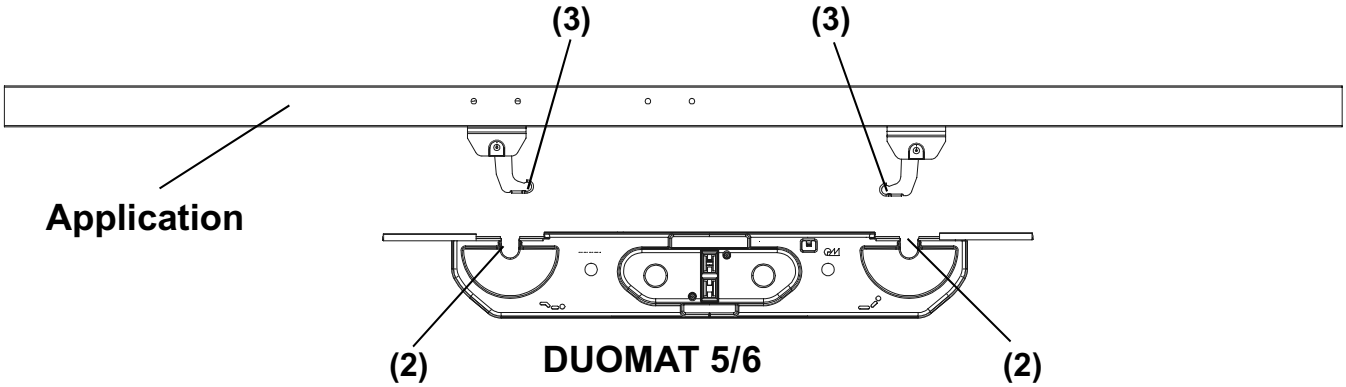

After dismantling, you should **re-engage** the **closer (1)** so as not to lose them.

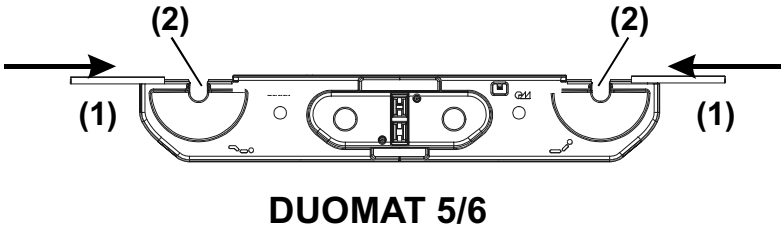

5. Operation

For drawing up the Operating Instructions for the end product, you can use the specialist information described herein. Please bear in mind that these instructions are intended for you as a specialist and not for the possibly nonprofessional operator of the end product.

a) Intermittent duty

Intermittent duty defines the **maximum length** of time that a drive can be operated **without interruption**. Following operation a specified rest period must be observed. In specifying the intermittent duty (ID), both values are stated as a ratio, **2 minutes continuous operation must be followed by a rest period of 18 minutes**. If the operation time is shorter, the rest period is correspondingly shorter. It is **essential** that these instructions are observed, as any possible **overloading** could trigger the protective safety device.

b) Cut-off plug (optional)

Automatic bipolar isolation of the mains transformer from the mains is achieved via a switching element. Connection to the mains is not made until a drive movement is initiated by pressing a key on the handset. This technology is used with slatted bed frame drives and in the case of standard transformers considerably reduces electromagnetic interference fields and the standby power absorption. **DUOMAT 5/6** with integrated mains cut-off may not be connected with domestic mains cut-off systems. This kind of mains cut-off is **not** to be understood as a "main command device" as defined by DIN (German Industrial Standards) and VDE regulations. To disconnect the drive system, you must therefore always unplug from the mains. **Before carrying out any work on this equipment, the working current to the drive system must always be cut off**. Unplug from the mains (safe switch-off as defined by DIN VDE 0105 and BGV A2 (formerly VBG 4)).

c) Emergency lowering (optional)

The emergency lowering facility allows a drive system to be operated in the event of a **power failure.** Depending on the version involved, the **DUOMAT 5/6** is powered via one or two 9V block batteries. Due to the greatly limited capacity of the power source, the block batteries are **not** connected factory-made. These batteries must be connected just in case of emergency. The drive movement via **emergency operation** is only possible **once.** Afterwards the **block batteries must be replaced** in order to **guarantee emergency lowering the next time** it is needed. Particular attention must be paid to the fact that in many cases drive movement under load is not possible.

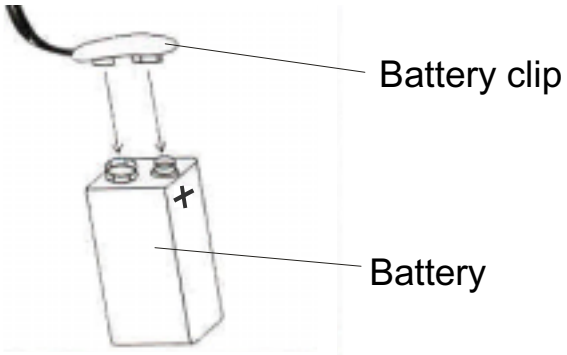

d) Handset (example)

The Handset of the **DUOMAT 5/6** can be equipped with up to 12 adjustment keys. The keys are explained as follows:

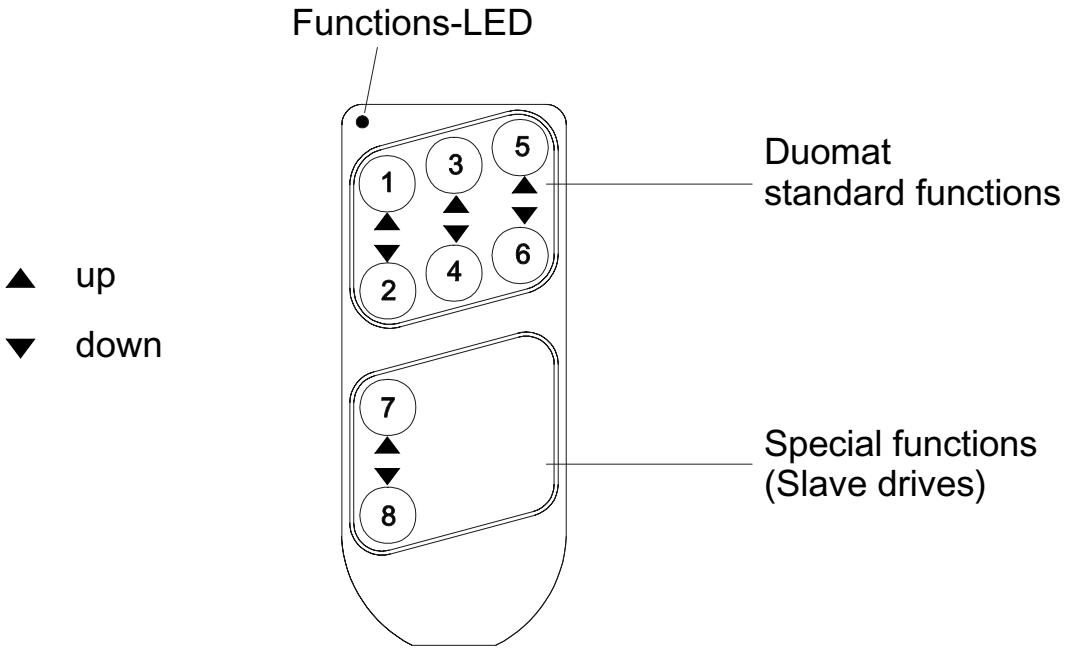

Example: DELUXE with 8 adjustment keys

Some handset types feature a **function LED**. **This lights up when a key is pressed**.

Depending on the optional extras included with the drive or the connection possibilities for slave drives (**TRIOMAT 5/6, QUADROMAT 5/6**), the keypad is equipped with more keys accordingly.

e) Maintenance and Repairs

At regular intervals carry out the inspections in accordance with the BGV A2 (Instruction of the Professional Trade Association). The inspections must be performed by an electrical specialist.
The recommended inspection period in accordance with the BGV A2 is: **6 months**

In addition to the above, the following checks should be carried out at shorter intervals:

- **Regular visual checks for damage of all kinds**
  Check the housing for cracks and fractures and the mains connection lead for signs of pinching and shearing-off. Also check the strain relief with kink protection, in particular after each case of mechanical loading.
- **Regular checks** of the protective conductor resistance and leakage currents (by a specialist)

6. Type Plate

Each drive component carries a type plate giving the exact designation, item number and technical specifications (for explanation see following figure as an example).

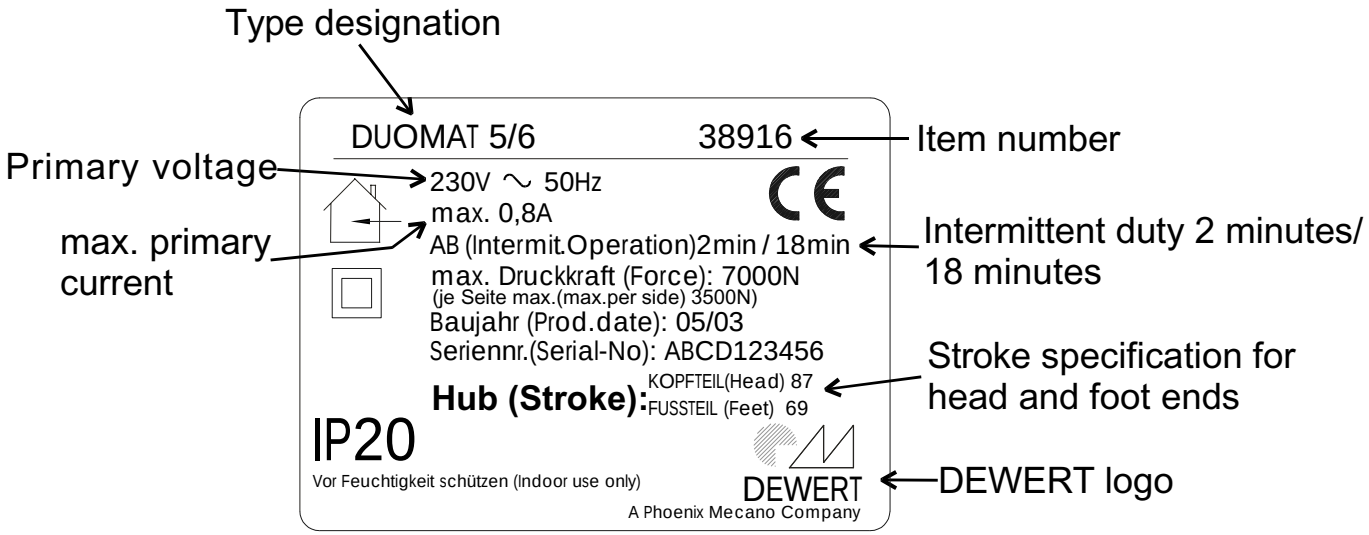

Graphical Symbols

Conformity marks

Protection classification II

IP20 Protection category

Do not dispose of with the normal household waste!

Dual system

Use in dry rooms only

In order to guarantee the safety of DEWERT products, a seal is attached to all DEWERT products. Opening the product damages the seal, thereby indicating that the drive has been altered or tampered with. The drive may only be opened by specialist personnel holding the qualifications as described on page 3.

7. Design of the Drive System

a) DUOMAT 5 (Example)

(Figure: DUOMAT 5 as QUADROMAT 5 with 2 slave drives)

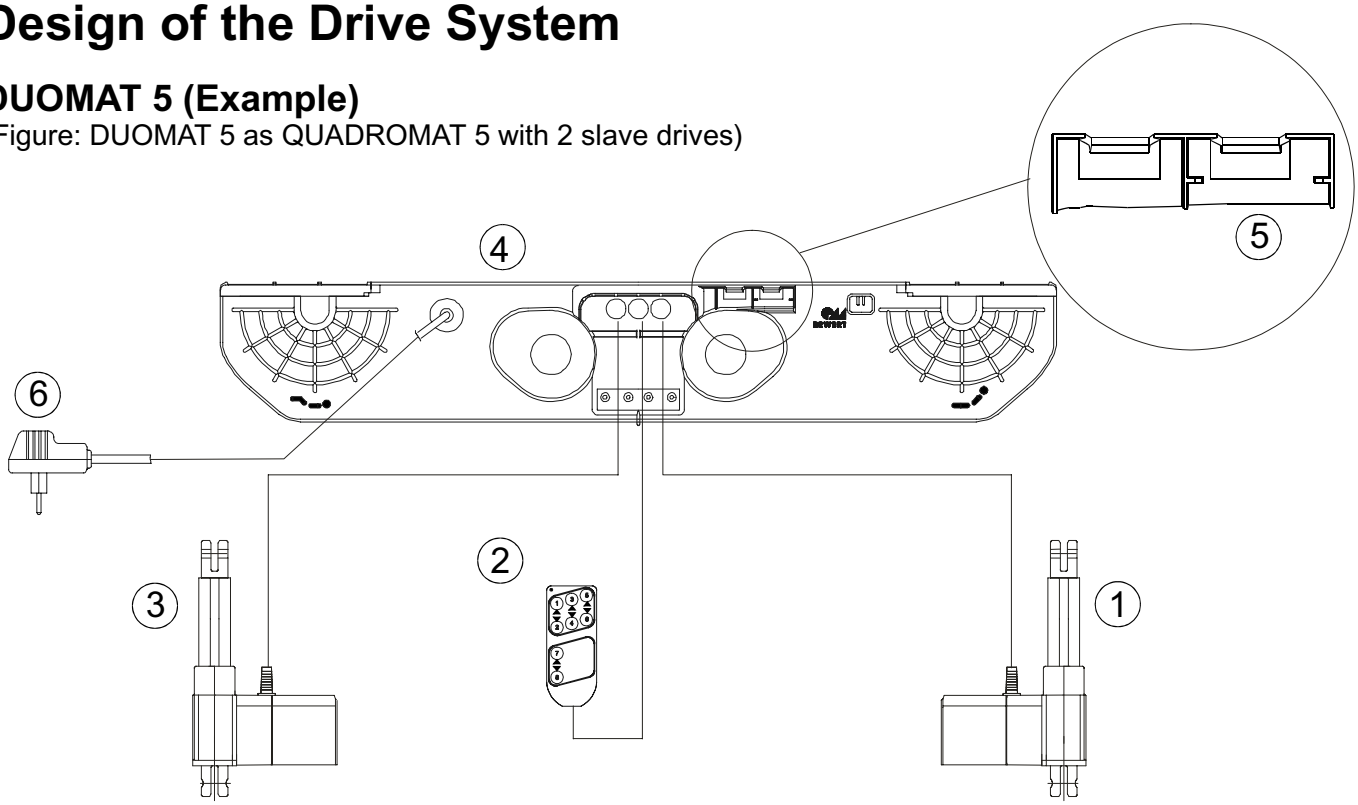

Only connect the components as shown!
This can otherwise result in damage to the drive control unit!

Pos.	Part designation	Description
1	DEWERT slave drive	e.g. MEGAMAT, DYMAT
2	DEWERT handset	e.g. STYLE, BALANCE
3	DEWERT slave drive	e.g. MEGAMAT, DYMAT
4	DUOMAT 5 dual drive	QUADROMAT version
5	Emergency lowering (NAS)	optional (see page 10)
6	Cut-off plug (NFS)	optional (see page 10)

On the optional earthing bolt (protection classification I) you can connect your bed to the mains protective conductor. This is marked by an earthing symbol. The connection lead is **not** included in the supply pack.

b) DUOMAT 6 (Example)

(Figure: DUOMAT 6)

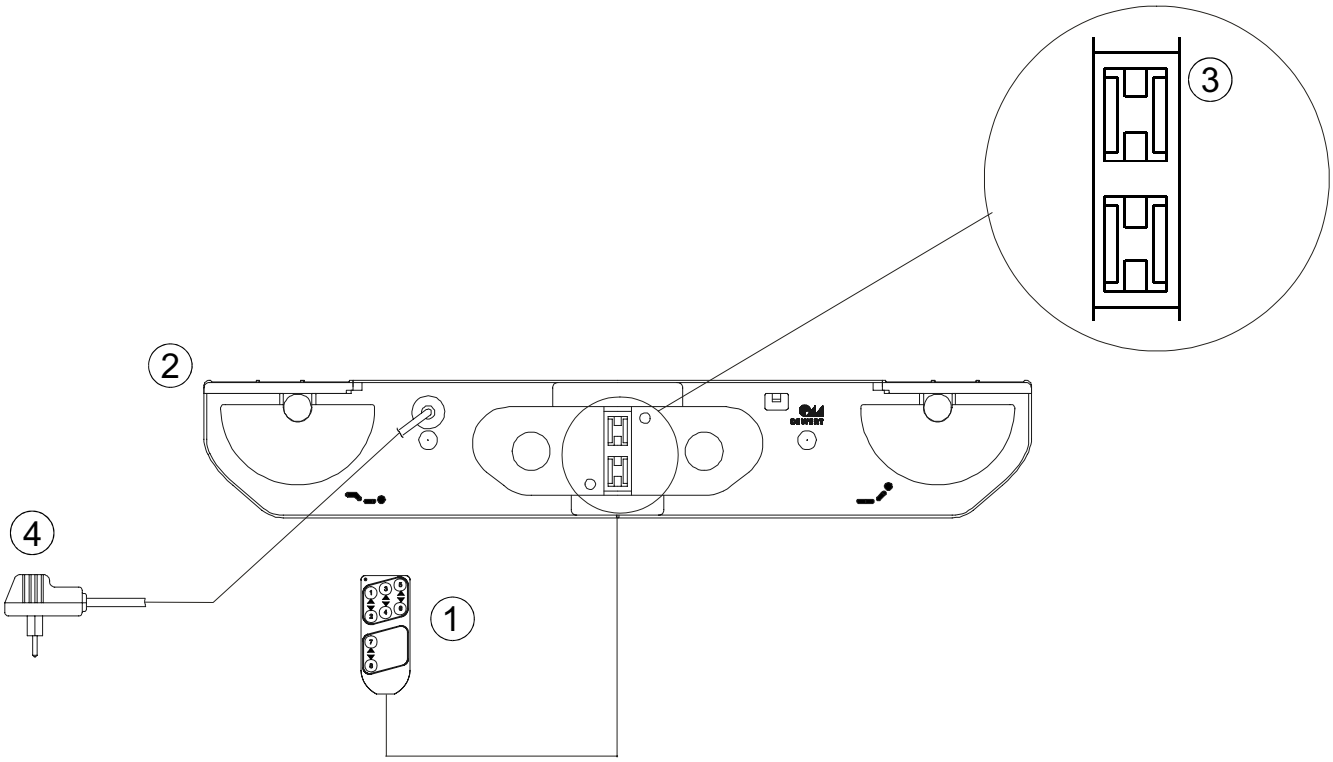

Only connect the components as shown!

This can otherwise result in damage to the drive control unit!

Pos.	Part designation	Description
1	DEWERT handset	e.g. STYLE, BALANCE
2	DUOMAT 6 dual drive	DUOMAT version
3	Emergency lowering (NAS)	optional (see page 10)
4	Cut-off plug (NFS)	optional (see page 10)

8. Trouble-shooter's Guide to Detect and Eliminate Faults/Errors

The following table has been developed to help you detect and eliminate common faults and errors. If you come across a fault/error that is not listed here, please contact your supplier. All of these faults/errors may only be inspected and rectified by specialists holding the qualifications as described on page 3.

Problem	Possible Cause	Remedy
Handset or drive system without function	- Handset or drive system defective - No supply voltage	- Contact your supplier/dealer
Drives suddenly no longer respond, no movement takes place	- Thermoswitch on transformer or in the control unit has been triggered - Temperature fuse in transformer defective - Miniature fuse defective - Feeder cable (mains and/or handset/slave drives) interrupted	- Leave the drive system in rest. position for approx. 20-30 minutes - Contact your supplier/dealer - Check the feeder cable, if necessary restoring contact
Emergency lowering cannot be carried out (option)	- Block battery is flat	- Check the block battery and, if necessary, replace

9. Cleaning

The **DUOMAT 5/6** drive system has been designed to facilitate cleaning for the user, and this has been made even easier thanks to the large number of flat surfaces.
The **DUOMAT 5/6** drive system should be cleaned with a proprietary cleaning agent suitable for **polyamide 6** using a damp cloth. Always note the instructions provided by the manufacturer of the respective cleaning agent used.

Before cleaning, always pull out the mains plug!

Never clean the drive system in a wash tunnel or with a **high-pressure cleaner nor spray liquids onto it**. You risk damaging the equipment!

When **cleaning** take care not to damage the drive system's **mains connection lead**!

The drive is not waterproof.

Do not use any solvents such as **benzene**, **alcohol** or similar substances.

10. Disposal

The **DUOMAT 5/6** drive system contains electronic components, cables, metal, plastic etc.
The **DUOMAT 5/6** drive system should be disposed of in accordance with the environmental regulations applicable in the respective country. Information on this subject can also be obtained from:

Federal Association for
Disposal Management BDE
Schönhauser Str. 3
51118 Cologne
Germany
Phone: +49(0)2 21/9 34 70 0-0

For drives offering emergency lowering, the batteries involved must be disposed off in accordance with the "AltBattVO" (ordinance on the disposal of old batteries).

Batteries may **not** be disposed off with the **normal household waste!**

DUOMAT 5/6

EC Manufacturer's Declaration

According to Appendix II B of the EC Machines Directive (98/37/EG)

The Manufacturer:

DEWERT
Antriebs- und Systemtechnik GmbH
Weststr. 1
32278 Kirchlengern

Germany

hereby declares that the drive system described below

MONOMAT 5/6

DUOMAT 5/6

TRIOMAT 5/6

QUADROMAT 5/6

is not a ready-to-use machine in keeping with the EC Machines Directive and, therefore, does not fully comply with the requirements of the Directive!

This machine may not be put into operation until conformity with the above Directive of the entire machine, into which it is to be installed, has been declared!

Partially applied harmonized standards:

EN 292-1 Safety of Machines, Basic Terminology, Methods

EN 292-2 Safety of Machines, Guiding Technical Principles

Kirchlengern, 06th September 2005

Herbert Stumpe
Mangement

EC Declarations

EC Declaration of Conformity

according to appendix I of the EC Directive on Electromagnetic Compatibly 89/336/EWG,
according to appendix III of EC Low-Voltage Directive 73/23/EWG

The Manufacturer:

DEWERT
Antriebs- und Systemtechnik GmbH
Weststr. 1
32278 Kirchlengern

Germany

hereby declares that the drive system described below

MONOMAT 5/6
DUOMAT 5/6
TRIOMAT 5/6
QUADROMAT 5/6

meets the following EC Directives:

Directive on Electromagnetic Compatibility 89/336/EWG
(last amended by 93/68/EWG)

Low-Voltage Directive 73/23/EWG
(last amended by 93/68/EWG)

Applied Standards:

EN 60335-1
EN 55014-1
EN 55014-2
EN 61000-3-2
EN 61000-3-3

Constructional changes which affect the technical data stated in the Installation Instructions as well as the designated use, in other words which change the drive system in a considerable way, make this Declaration of Conformity null and void!

Kirchlengern, 06th September 2005

Herbert Stumpe
Mangement

DEWERT
A Phoenix Mecano Company

DEWERT
Antriebs- und Systemtechnik GmbH
Weststraße 1
32278 Kirchlengern
Germany
Phone:+49(0)5223/979-0
Fax: +49(0)5223/75182
http://www.dewert.de
Info@dewert.de

ID No. 44161